Sustainable Nuclear Power via Implementation of a Closed Fuel Cycle

Dr. Michael F. Simpson
Idaho National Laboratory

June 22, 2011

www.inl.gov

Idaho National Laboratory

Outline

- How important is nuclear power in the world today?
- Current nuclear fuel resources
- Current and projected consumption rates
- Concept of a closed nuclear fuel cycle
- Specific fuel cycle technology options
  - Aqueous separations processes
  - Pyrochemical separations processes
- Key challenges for moving forward with a sustainable nuclear fuel cycle

Requirements for Sustainable Nuclear Energy

- No short-term depletion of natural resources (U)
- Minimal negative effect on the environment
- Economical energy production
- Disposal path for indefinite nuclear waste production
- High level of operational safety
- Safeguardable technology

Availability of Different Energy Sources

Energy System	Energy Availability
Natural gas Oil	40-90 years
Hard coal Lignite	Several hundred years
Solar Wind Hydro	Virtually unlimited duration, highly limited rate of recovery
Nuclear fission (LWR technology)	40-90 years
Nuclear fission (breeder technology)	Many thousands of years
Nuclear fusion (D-T cycle)	Many thousands of years
Nuclear fusion (D-D cycle)	Virtually unlimited

Ref. Kessler (2000) adjusted to 2010

Nuclear Power in the World Today (2008)

- Worldwide 372 GWe (14% of electricity generation)
- Current expansion is centered in Asia (China, India, and Russia)
- Significant electricity generated via nuclear in:
  - Armenia (39.4%)
  - Belgium (53.8%)
  - Bulgaria (32.9%)
  - Czech Republic (32.5%)
  - France (76.2%)
  - Hungary (37.2%)
  - Republic of Korea (35.6%)
  - Lithuania (72.9%)
  - Slovakia (56.4%)
  - Slovenia (41.7%)
  - Sweden (42.0%)
  - Switzerland (39.2%)
  - Ukraine (47.4%)

United States: 19.7%

Projected Global Growth of Nuclear Electricity

- 404 – 625 GW(e) by 2030 (8.6 to 68% increase)
- 580 – 1400 GW(e) by 2050 (56 to 276% increase)

This begs the question of sustainability

Uranium Resources

- Natural uranium form: oxide with 0.7% U-235 enrichment
- Current projection: 5.5 million tons
- Current use rate: 70,000 tons/year (83 years supply with no new discoveries and fixed rate of use)
- Over the last 14 years, estimated resources have increased by more than 2.4 million tons, in spite of 0.5 million tons mined
- Resources will increase as uranium price increases
- Not all known resources have been reported and included in the 5.5 million ton estimate
- The actual lifetime of the uranium resources is a complex function of expansion of nuclear power, increasing demand for nuclear power, and expansion of uranium exploration.

Energy Value in Existing Spent Fuel

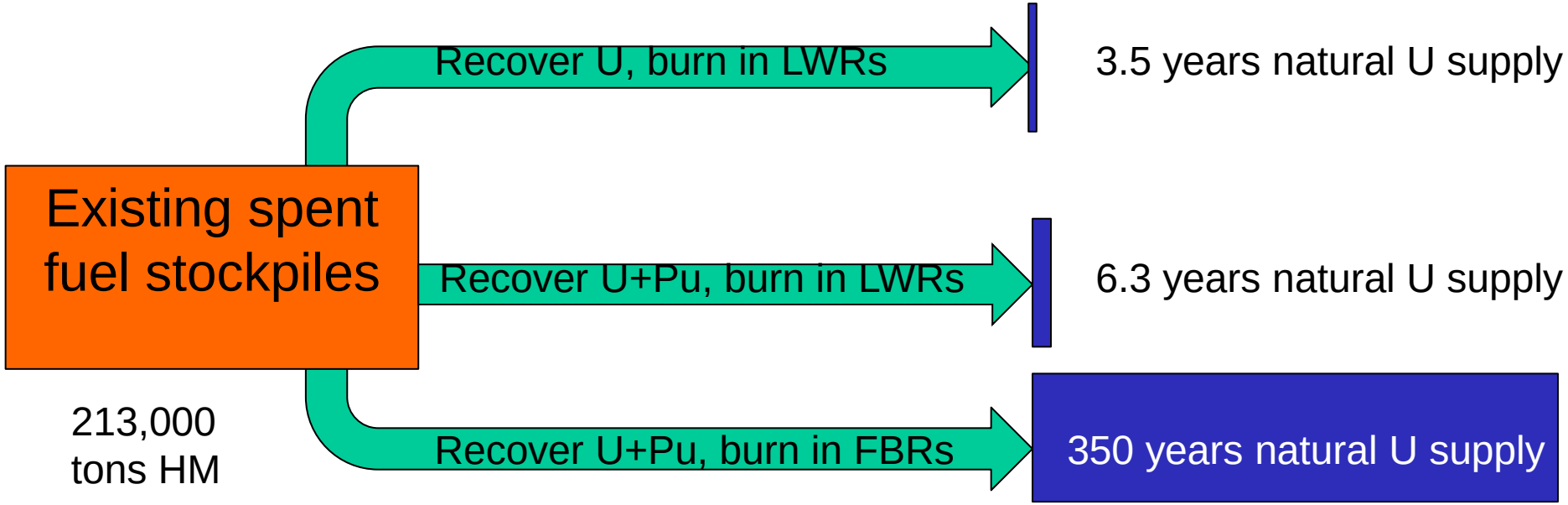

Fast Reactors

- Can use as fuel the waste produced by thermal reactors (long-lived minor actinides)
- 20% of the nuclear reactor fleet should be fast reactors to effectively manage waste from thermal reactors
- Russia is only country with fast reactors currently providing power to the grid (560 MWe Beloyarsk 3)
- Currently under construction/development:
  - China Experimental Fast Reactor (20 MWe)
  - India's Prototype Fast Breeder Reactor (500 MWe)
  - Japan's prototype breeder reaction, Monju, refurbished and ready to restart
  - Russia has additional 880 MWe fast reactor under construction at Beloyarsk planned for 2014 startup

Japan's Monju FBR

Closing the Nuclear Fuel Cycle

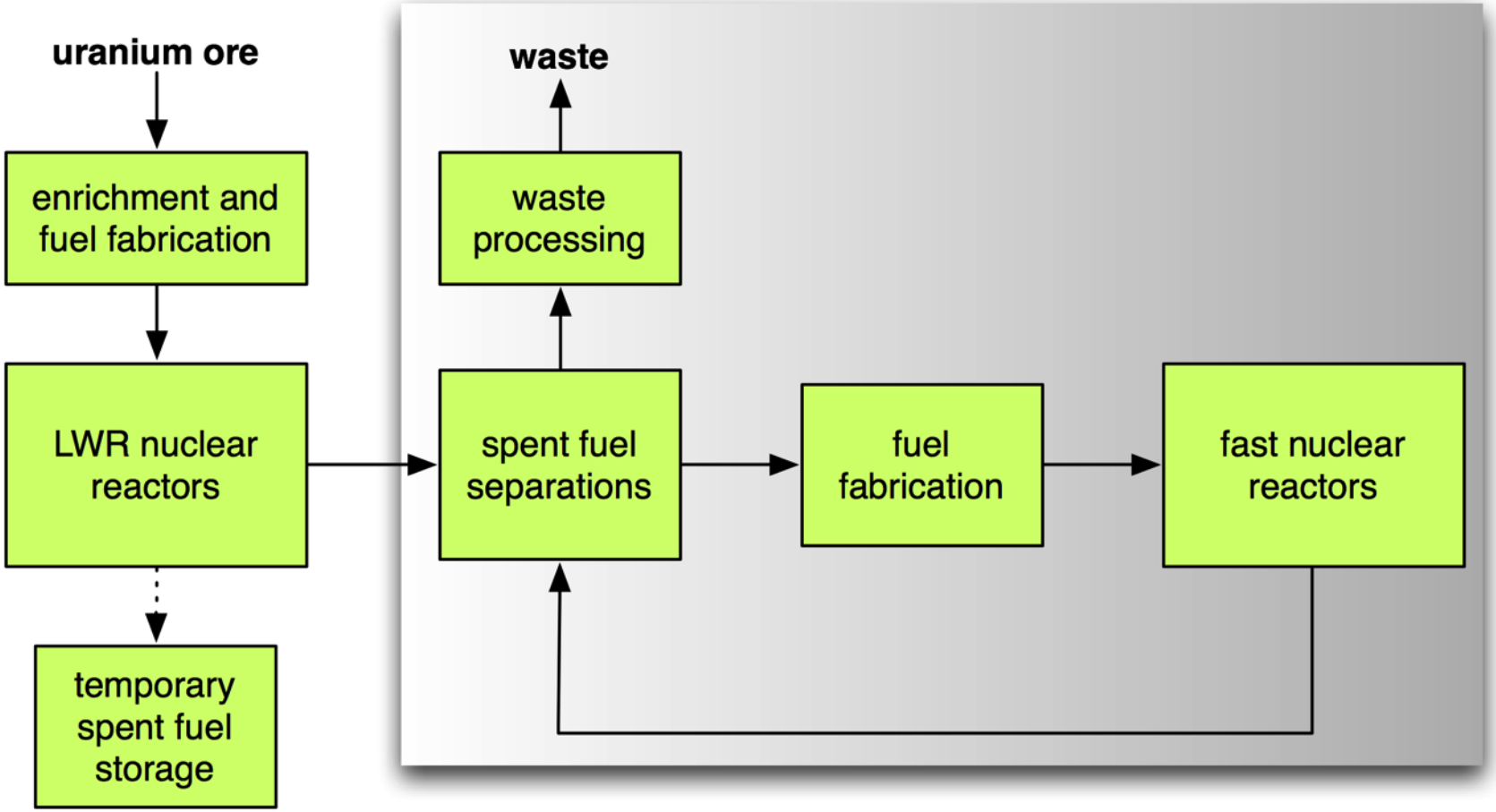

Fuel Recycle Systems can be Divided into two Categories

- Aqueous processes have been widely used.
  - Bismuth phosphate recovered plutonium in 1942.
  - REDOX process was second application in early 1950s.
  - Many solvent extraction systems were investigated.
  - PUREX using tributyl phosphate became the standard and used internationally.
- Nonaqueous processes have had selective use.
  - Uranium hexafluoride was used for uranium enrichment.
  - Melt refining was demonstrated at the start of EBR-II.
  - Plutonium electrorefining (pyroprocessing) was developed for actinide systems in the mid-1960s.
- Pyroprocessing is widely considered to be the best technology for recycling fuel from a fast reactor

DOE's Fuel Cycle R&D Program

- FCR&D is focused on fundamental science to support a future decision to close the fuel cycle. Important factors include
  - Cost reduction
  - Reclaim the energy value from the spent fuel
  - Reducing need for high level waste disposal
- At present both aqueous and pyrochemical technologies are being assessed.
- INL is actively engaged in research into both technologies
- The EBR-II Spent Fuel Treatment Project at INL is the most advanced technically and by scale current operation in the world involving pyrochemical spent fuel treatment

Aqueous Separations

Examples include PUREX, UREX, and COEX

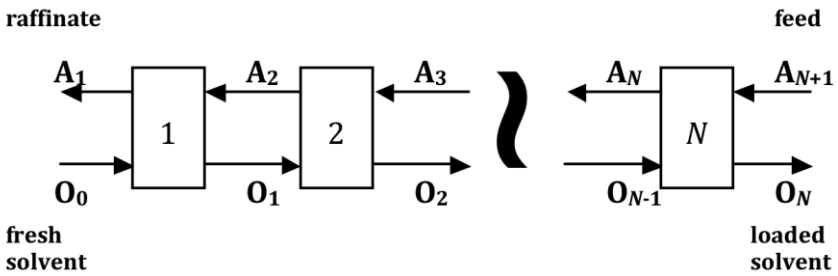

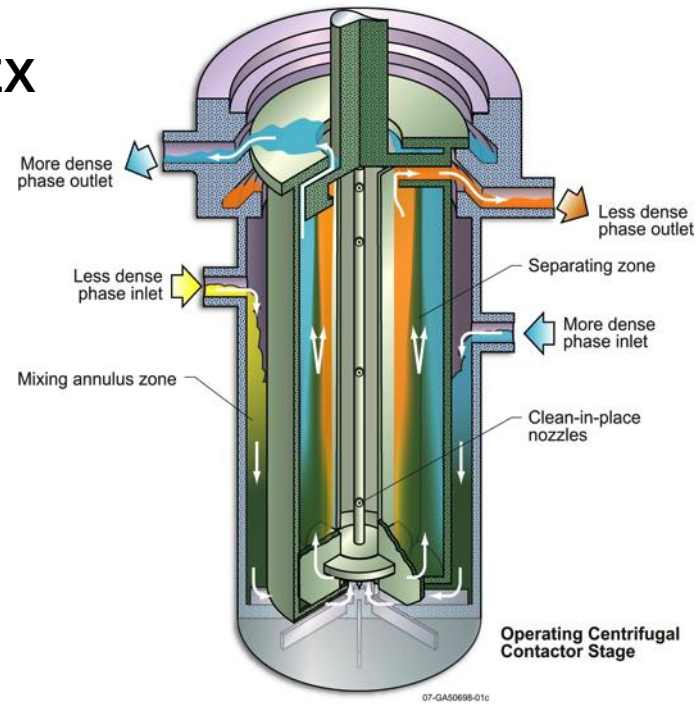

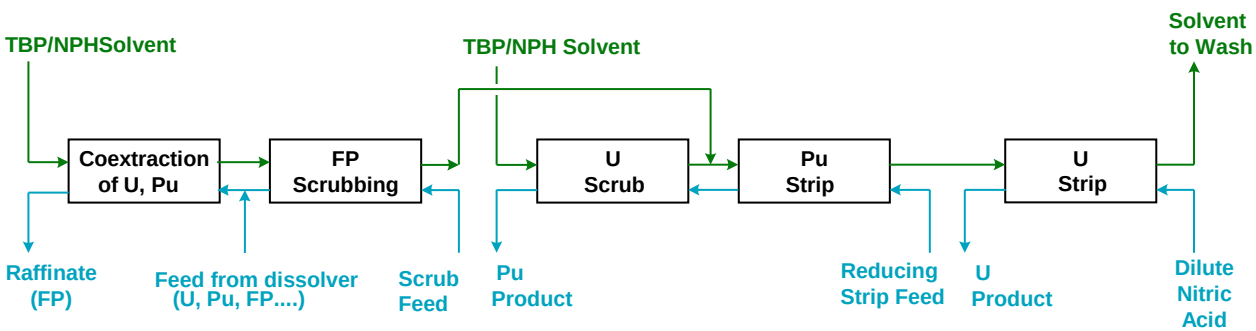

Pyroprocessing

- Initially developed at Argonne National Laboratory under the Integral Fast Reactor program to provide
  - Compact, on-site spent fuel separations and fuel fabrication
  - Efficient handling of sodium bonding
  - Critically-safe conditions for processing high enriched fuel
  - Robust method for processing high burnup fuel (avoid organic solvents)
- Defining characteristics
  - Dry process, employing molten metals and molten salts
  - High temperature process (T>450 C)
  - Electrochemical separation of actinides from fission products, cladding, and sodium
  - Conversion of sodium metal to sodium chloride
  - Not designed to recover pure Pu (in contrast with PUREX)

Pyroprocessing Flowsheet

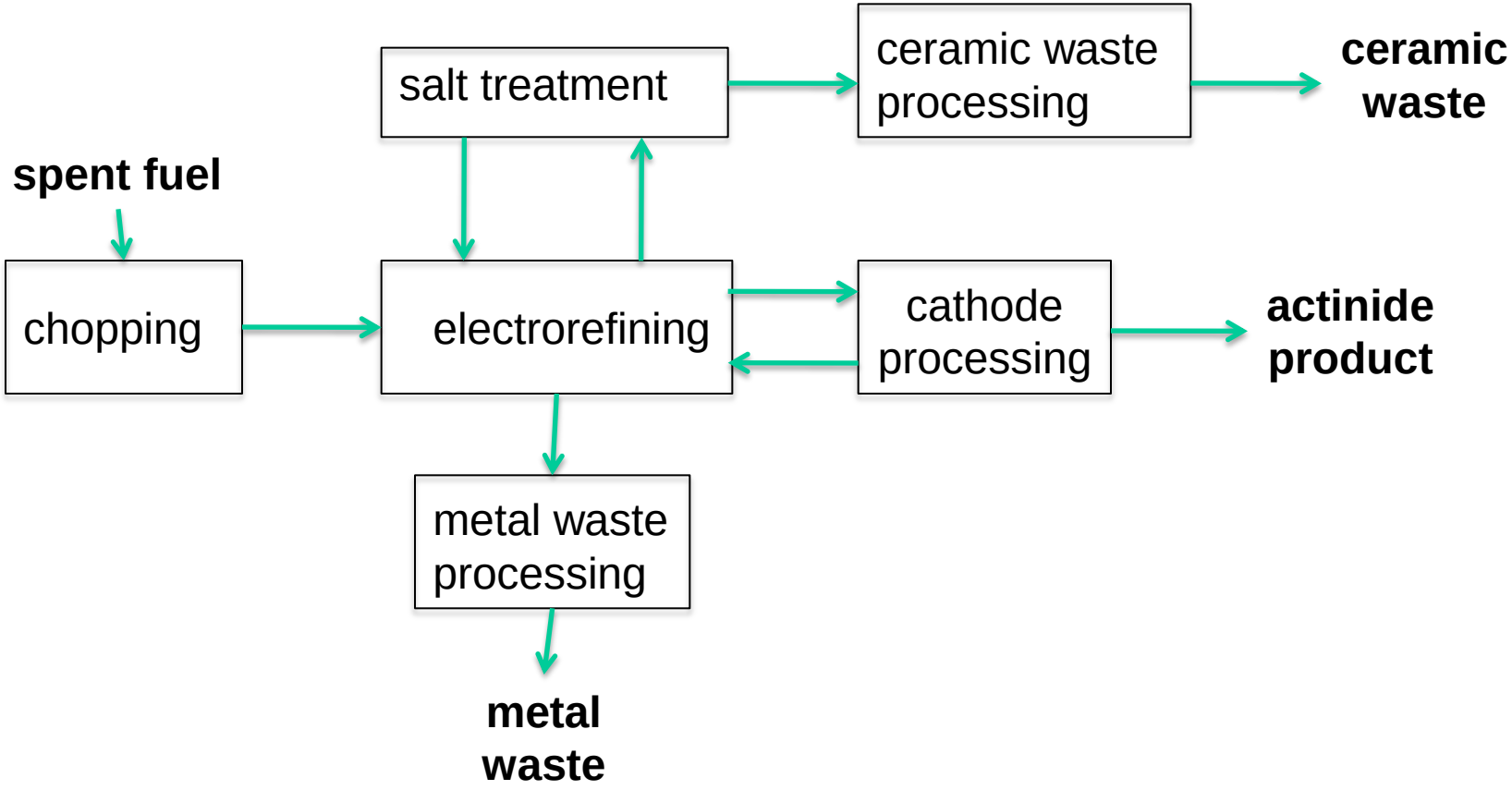

Thermochemical Basis for Electrorefining

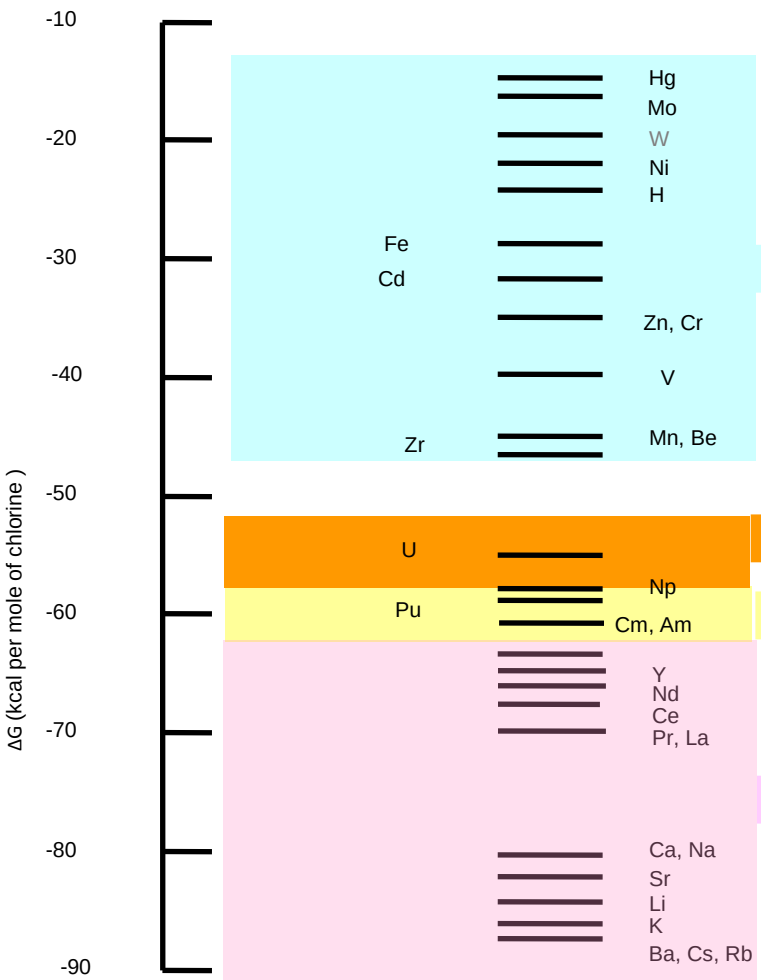

Retained with cladding materials in the anode basket → metal waste

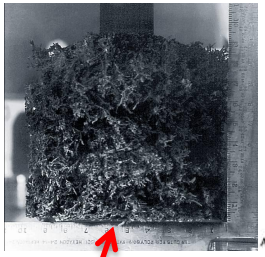

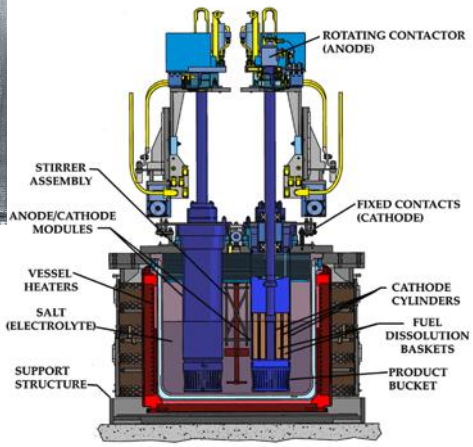

Recovered by a solid cathode as uranium product → fabrication of recycled fuel

Recovered by liquid cadmium cathode together with uranium → fabrication of recycled fuel

External electrical potential is needed

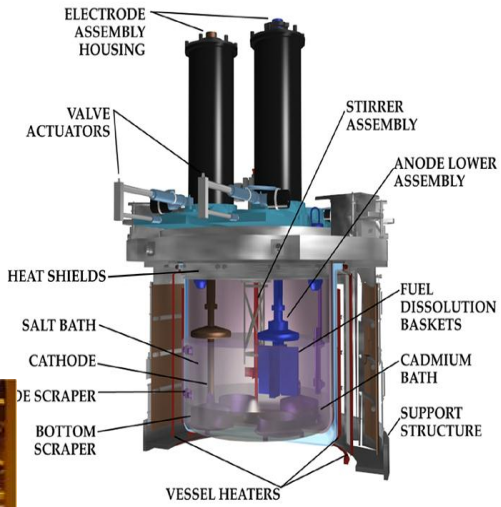

Accumulated in the molten salt → ceramic waste

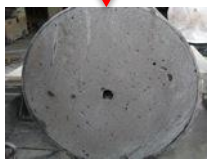

How Electrorefining Works

- Spent fuel chopped and loaded into anode baskets
- Salt maintained at 450-500 C
  - LiCl-KCl
  - UCl_3
  - NaCl, TRU and fission product chlorides
- Uranium metal electrically oxidized to U^{3+} and simultaneously reduced to U on cathode. Pu does not deposit.
- Chemical oxidation simultaneously occurs of Pu and other active metals
- Cadium pool below the salt adds flexibility
  - Captures material from anode and cathode
  - Can be operated as an anode to cleanup ER

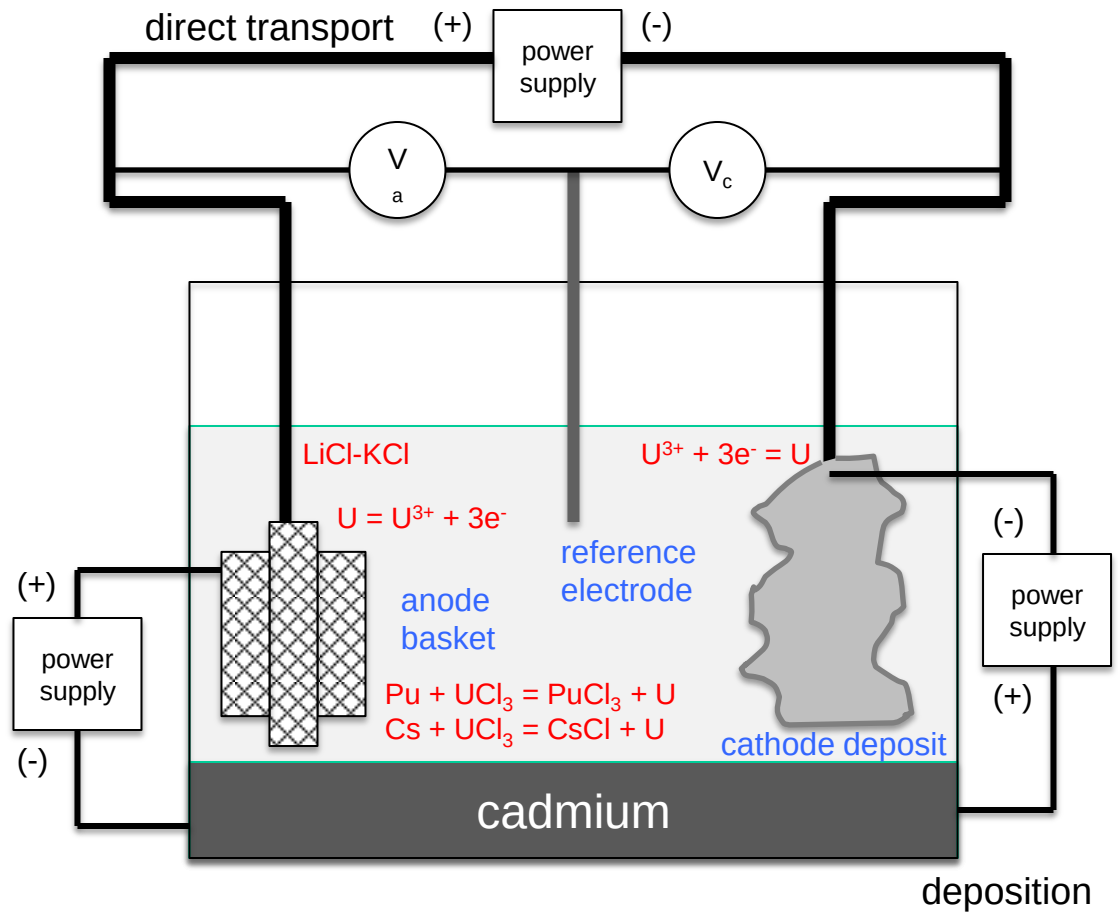

$$Pu_m + UCl_{3(s)} \rightarrow PuCl_{3(s)} + U_m$$

$$\Delta G^o = -22.4\ kcal/mole$$

why Pu does not deposit….

High-Level Wastes

- Two high-level wastes are produced from pyrochemical processing.
- A sodalite-based ceramic waste stabilizes fission products that form chlorides.
- A stainless-steel-15% zirconium metal waste stabilizes cladding hulls and more noble fission products.

Experimental Breeder Reactor-II

- Located on Materials and Fuels Complex of Idaho National Laboratory
- EBR-II was a metallic-fueled sodium-cooled, fast reactor.
  - Operated from 1963 to 1995.
  - Uranium-10 wt % zirconium driver fuel.
  - High enrichment driver fuel (63-75%)
  - DU blanket (1% Pu--used for breeding)
  - High burnup (>30 atom %) achieved in some fuel pins.
  - All fuel sodium bonded
- Demonstration test reactor for Integral Fast Reactor System (1984 to 1995).

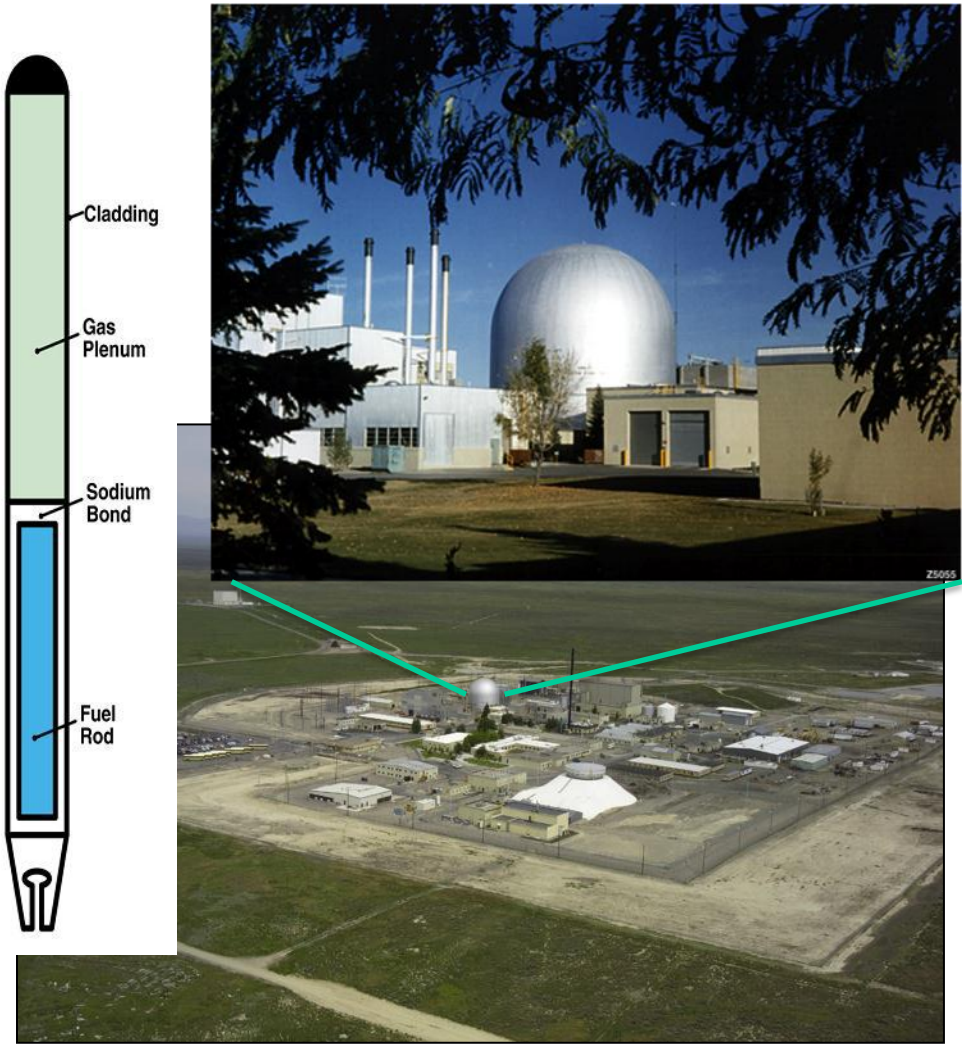

Flowsheet for EBR-II Fuel Treatment

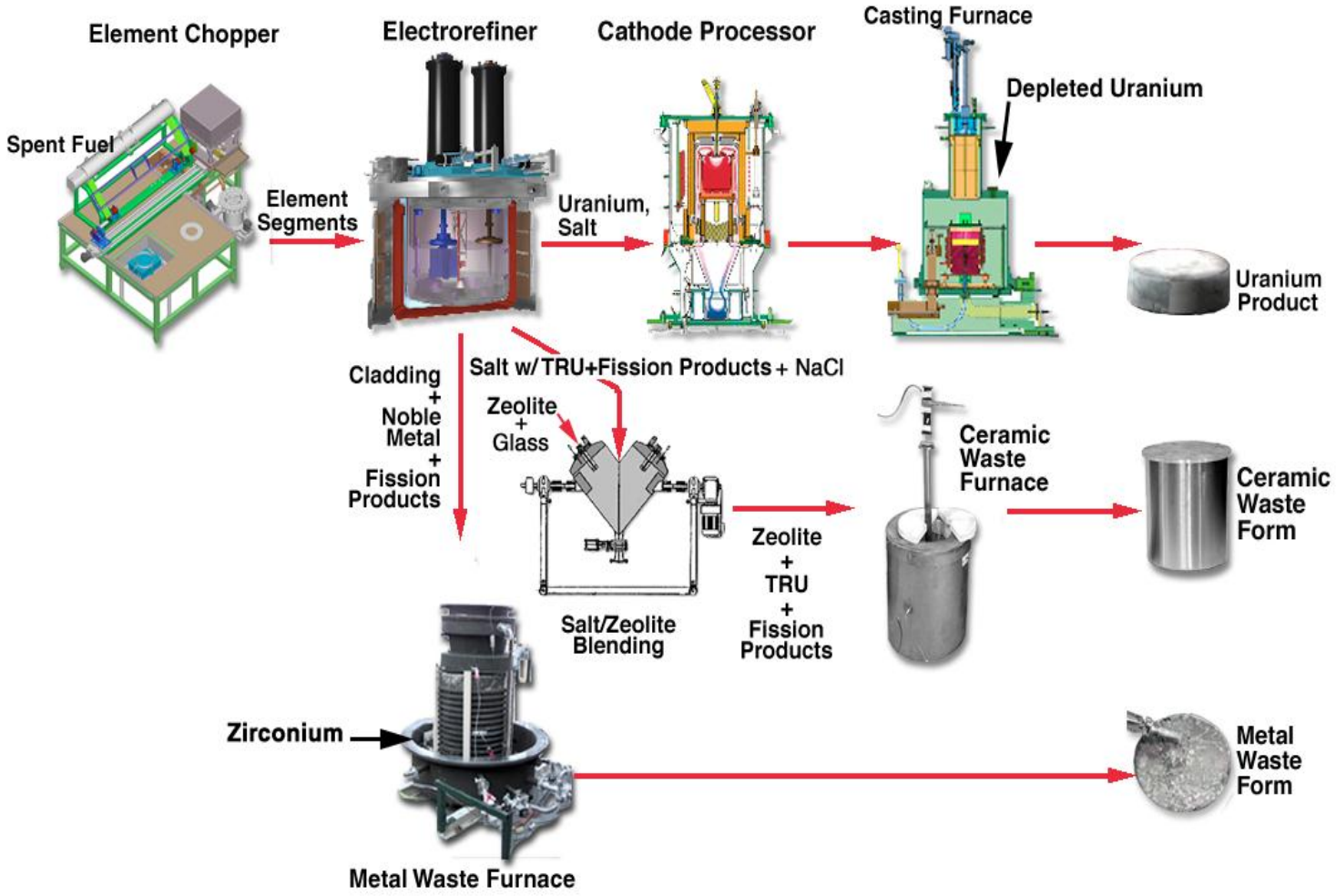

Fuel Conditioning Facility

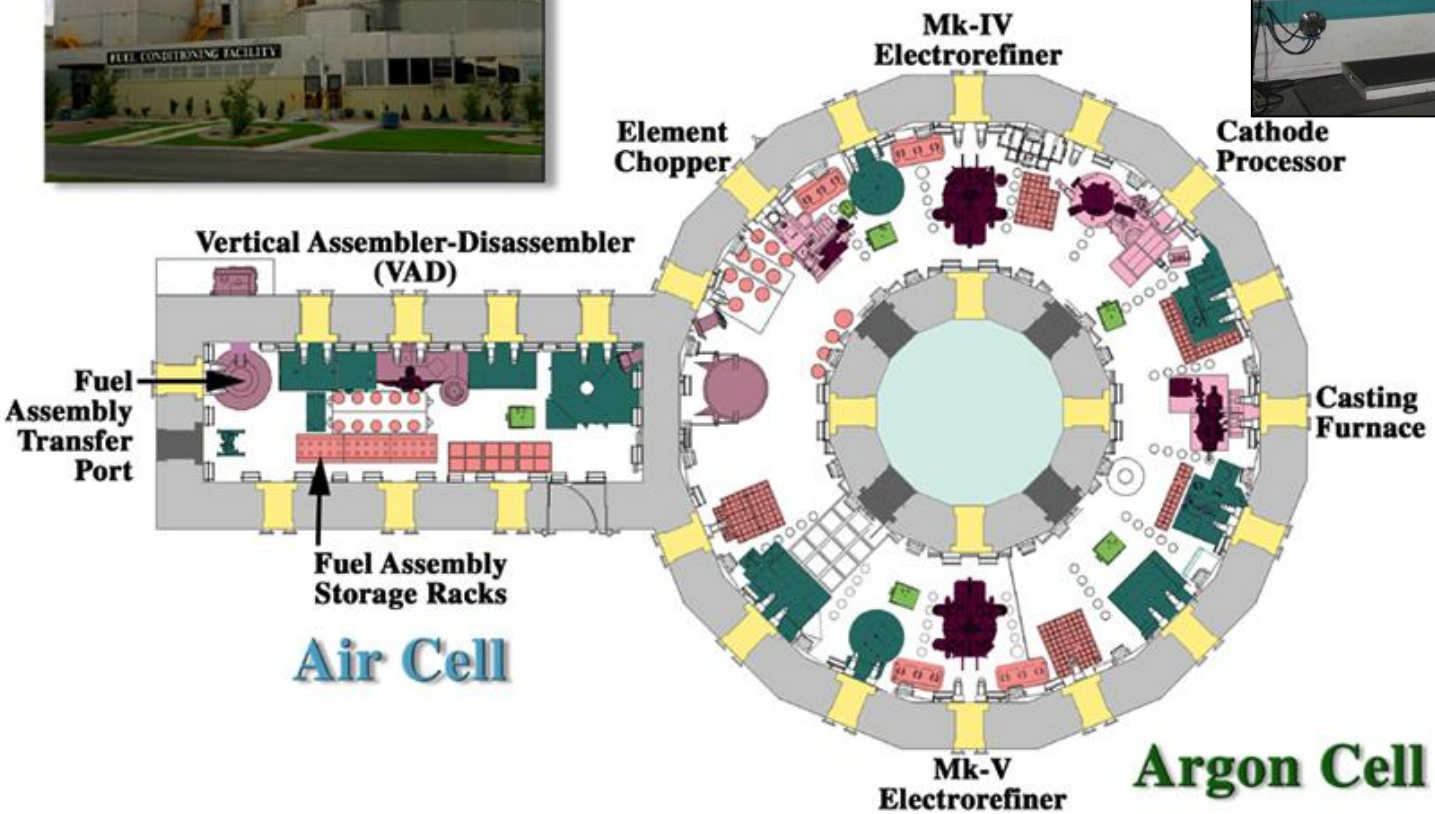

Mark-IV Electrorefiner (driver treatment)

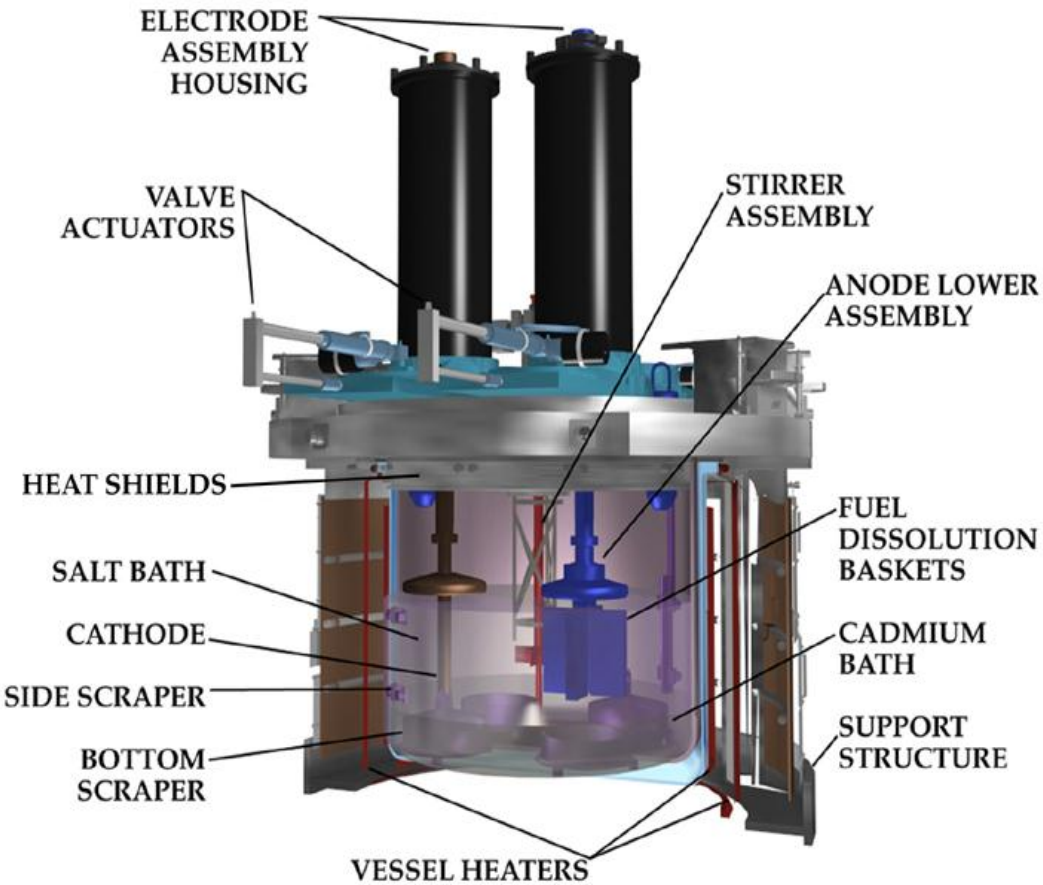

Anode Assembly

Cathode Deposit

Fuel Processing rate up to 400 kg/year

Mark-V Electrorefiner (blanket treatment)

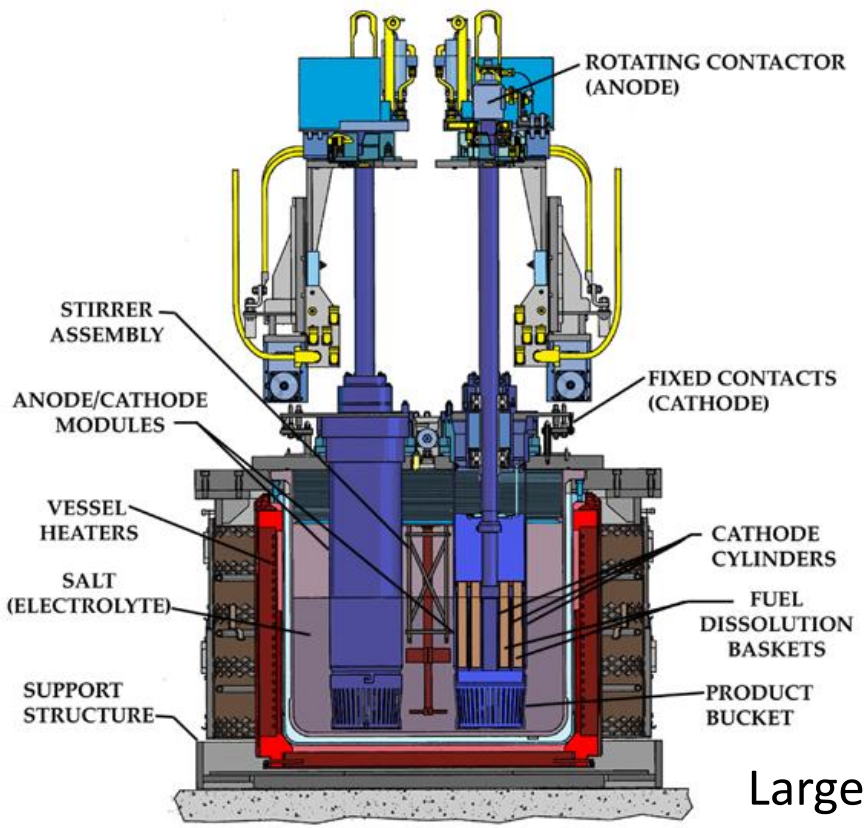

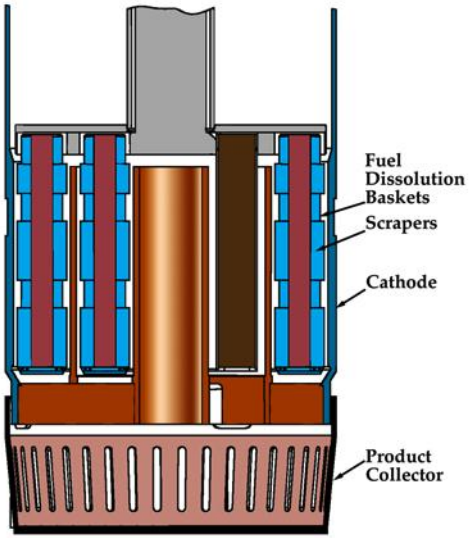

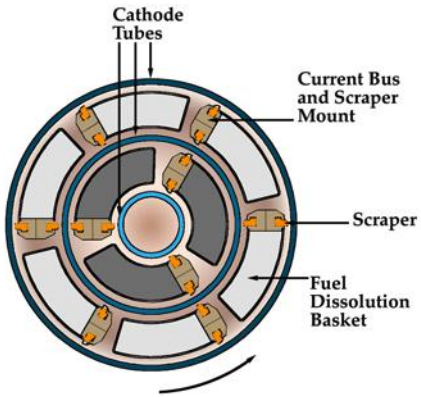

Concentric Anode Cathode Details
(4 units per electrorefiner)

Large electrode surfaces
Low solution resistance
High current capacity

Fuel Processing rate up to 3400 kg/year

Cathode Processor

- Removes adhering salt (approx 20% total mass of dendrites) via vacuum distillation and melts U to form ingots
- Installed in Fuel Cycle Facility (FCF) and processes cathode deposits from Mark-IV and Mark-V ERs
- Induction-heated (1400 C) with vacuum down to 0.1 torr
- Batch size 20-50 kg

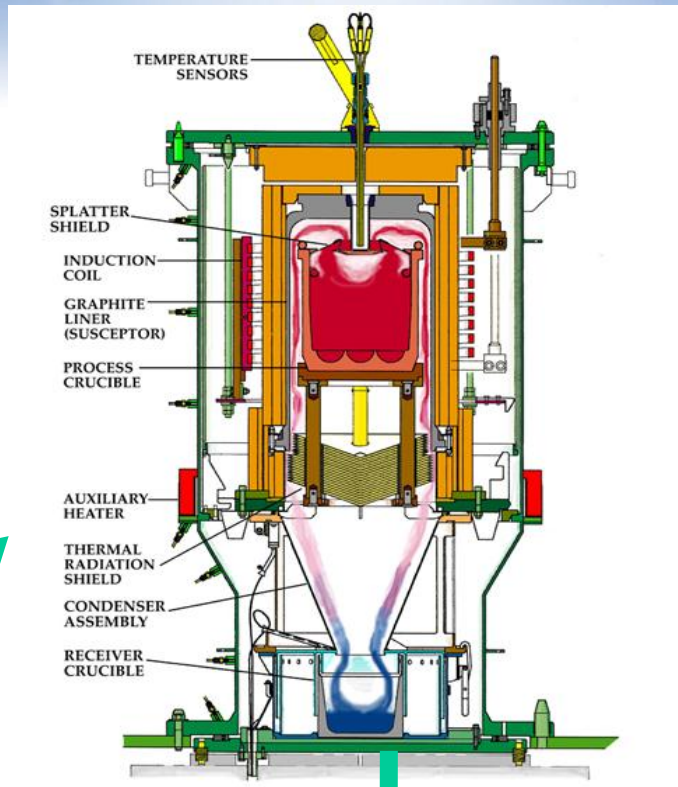

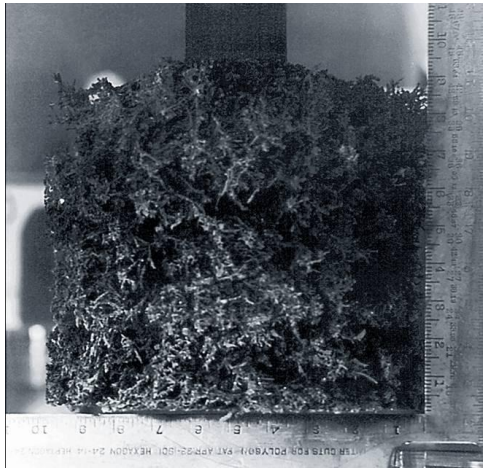

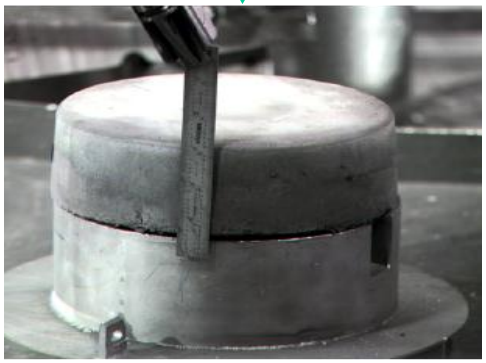

Metal Waste Furnace

- Metallic sodium in the cladding plenum sections is reacted with ferrous chloride to form stable sodium chloride and metallic iron.
- Salts (primarily LiCl, KCl, and NaCl) are vacuum distilled from the cladding hulls between 800-1350°C.
- Hulls and zirconium wire are melted and alloyed to form homogenous alloy.

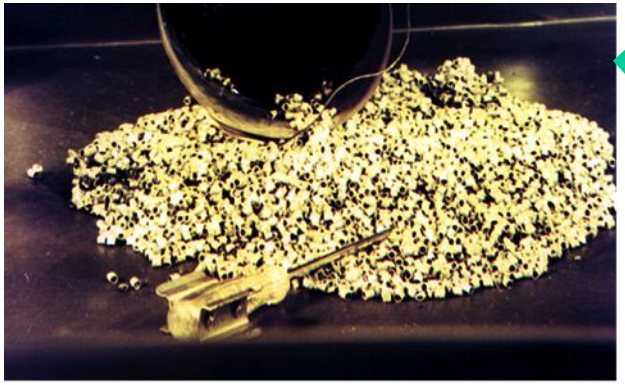

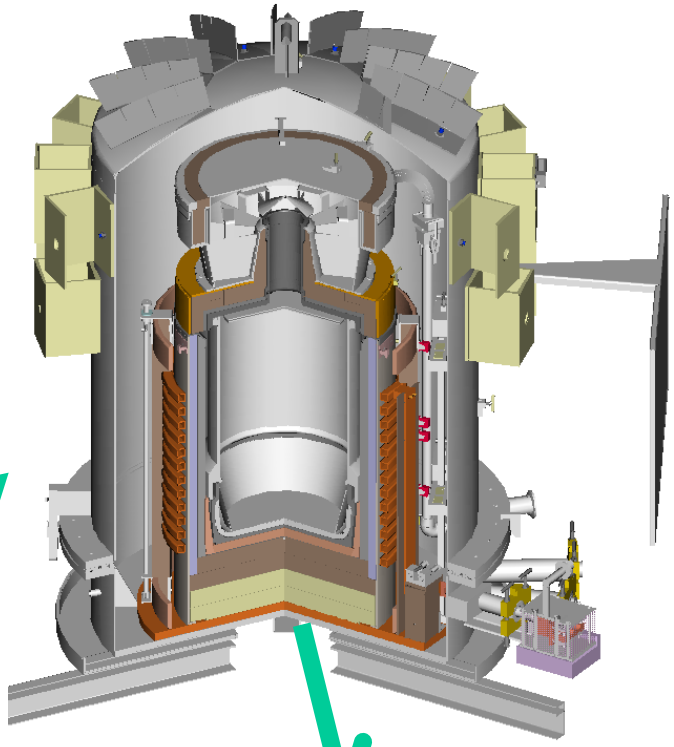

Chemistry of Waste Salt Processing

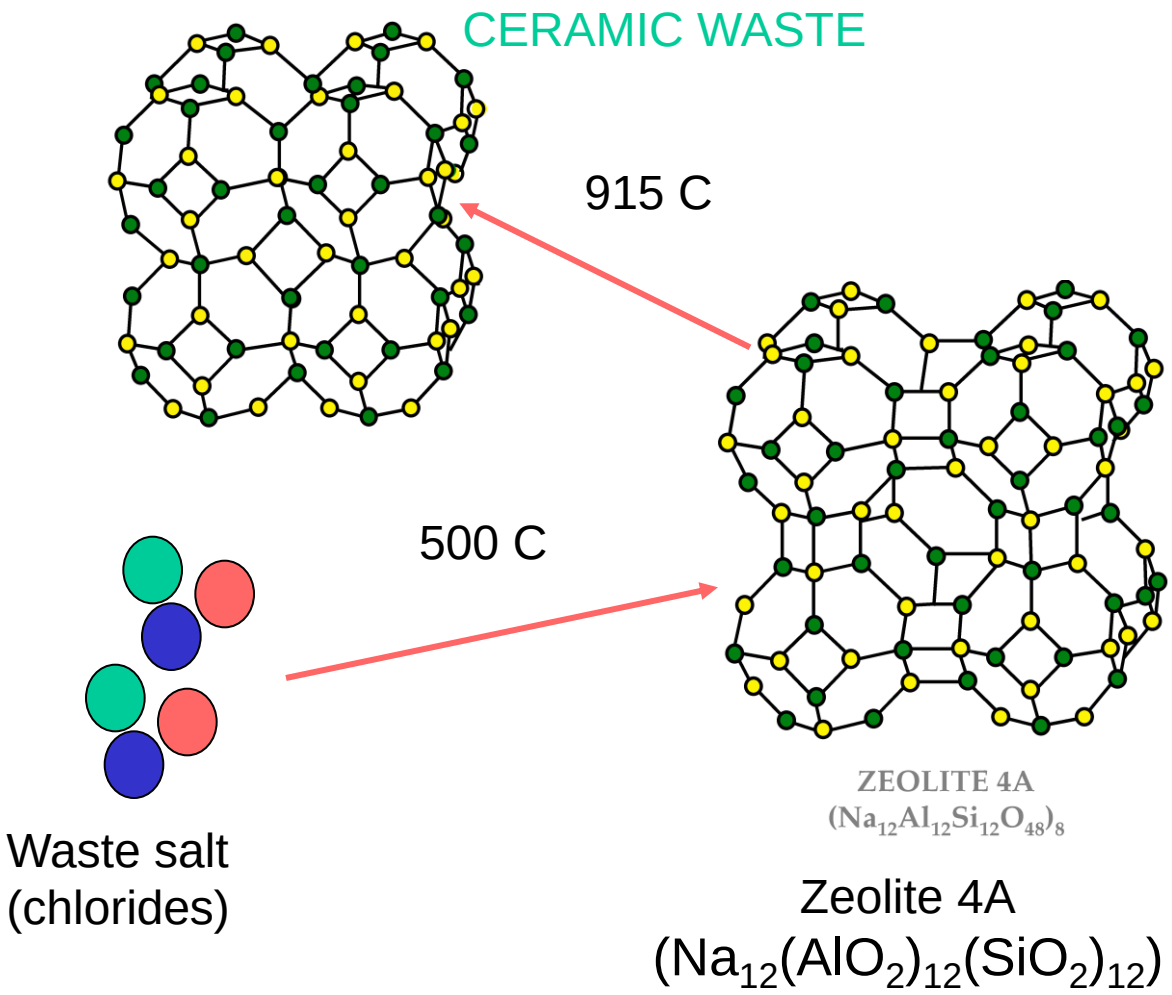

- Zeolite is a crystalline aluminosilicate material containing micropores
- Zeolite 4A absorbs salt at 500 C.
- Salt occluded zeolite-A is then mixed with glass and heated to form sodalite.
- Most salt is bound by sodalite, while some partitions into the glass phase.

Ceramic Waste Process

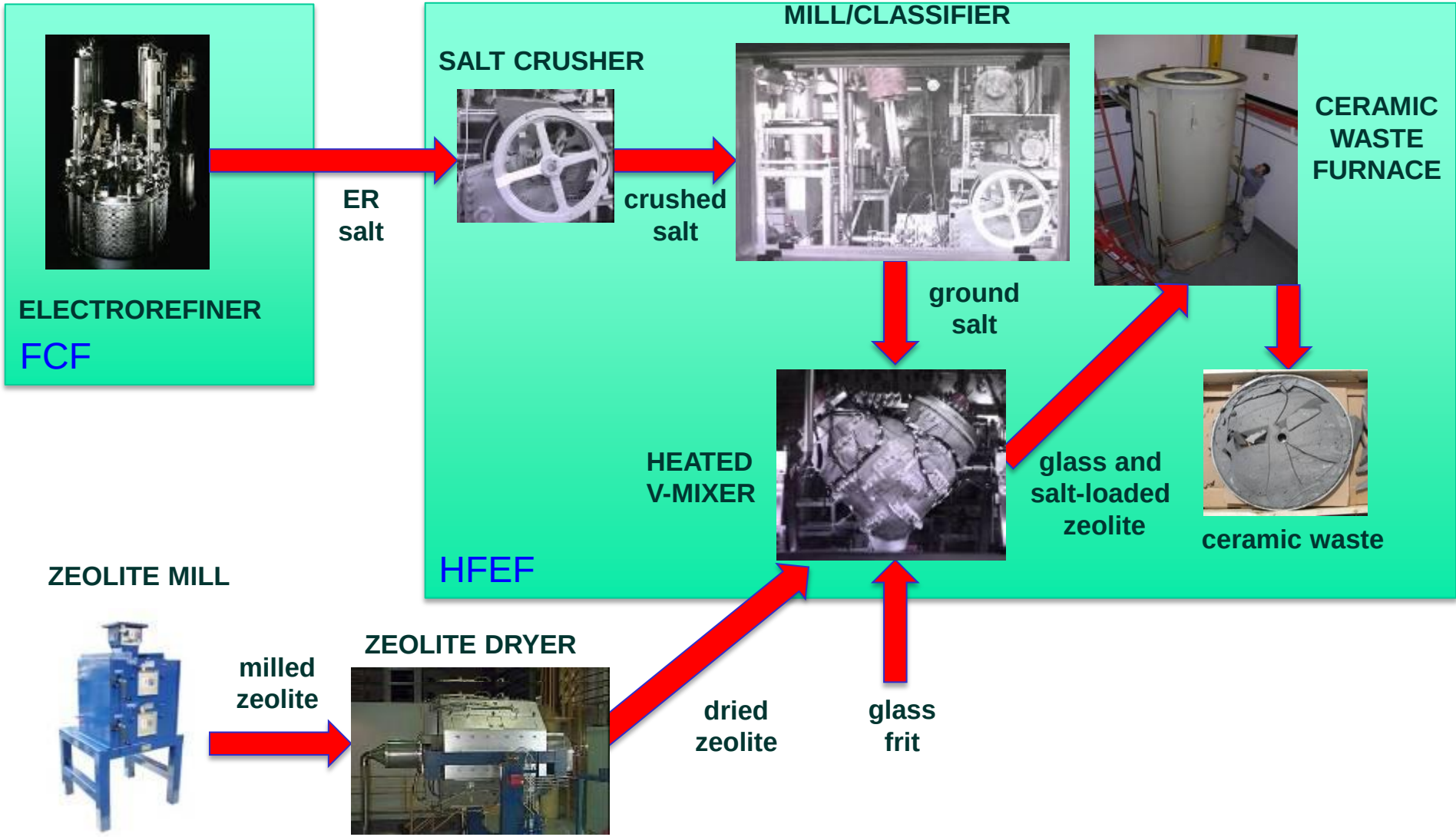

Injection Casting of Metal Fuel

- Well adapted to remote operations
- High Am-content fuels can present a problem due to Am volatility
- High thermal conductivity from metal fuel and sodium bonding
- Limited to intermediate core temperatures (700 C safe)

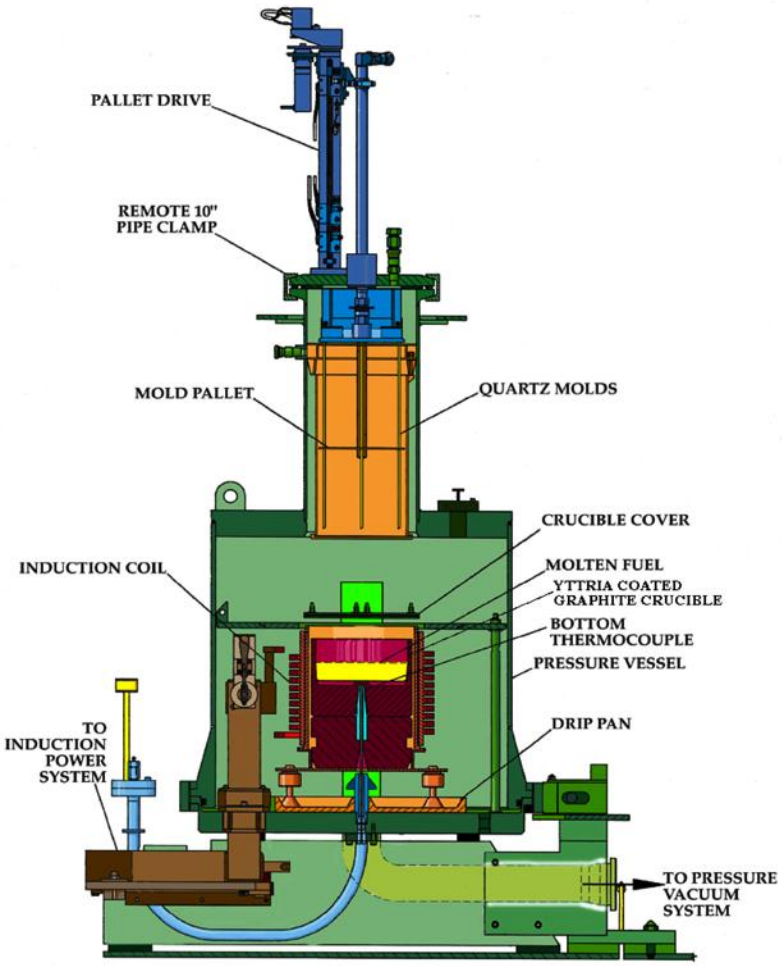

Key Steps for Moving Forward with a Closed Fuel Cycle

- Improving safeguards technology
- Lowering cost of reprocessing
- Identifying disposal path for waste containing long-lived radioactive fission products
- Addressing public concerns regarding safety